Dual Junction Drop-in Circulator 0.7 to 3.1GHz

- Commercial, military and space applications.
- May according to demand making to order.
- One year standard limited warranty.

Product Specifications:

Part Number	Freq. Range (GHz)	Bandwidth Max. (MHz)	Insertion Loss Max.(dB)	Isolation Min. (dB)	VSWR Max.	FWD/REV Power (W)	Connector Type	Temp. Range (℃)
SS-HDI5025A	0.7-1.0	30	0.6	45	1.2	200/30	N/SMA	-30~+70
	1.0-3.1	100	0.6	45	1.2			
	1.3-3.1	200	0.8	40	1.25			
	1.7-2.2	Full	1.2	36	1.3			

* Please specifies frequency range,power and port type when you put order.
* If your requirement not in list, we still can make it, please contact us.

Outline Drawing (Unit: mm)

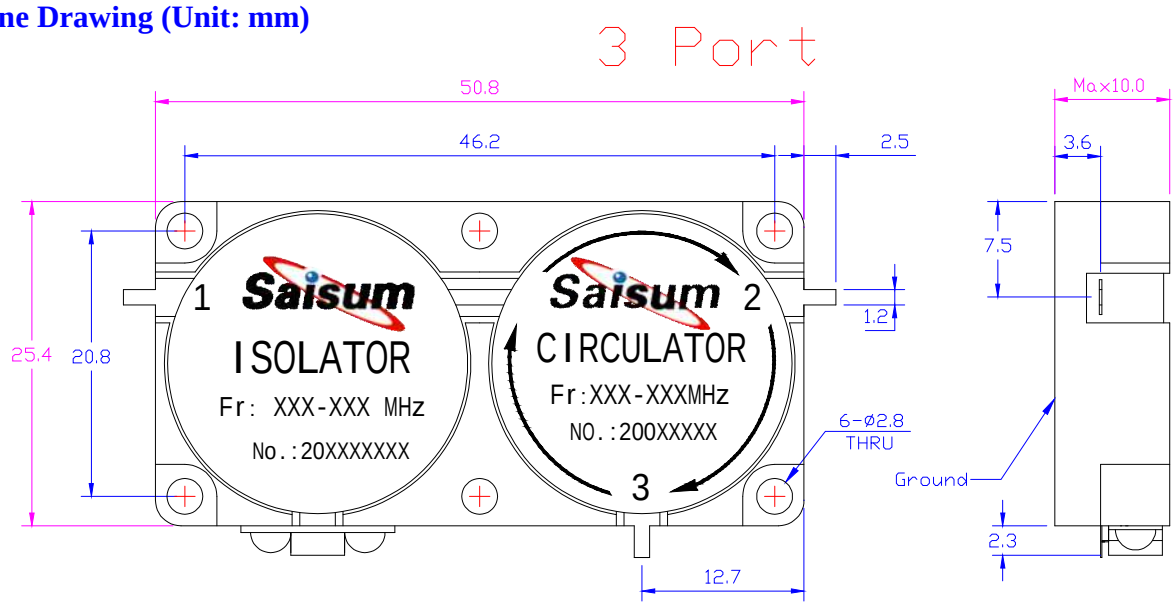

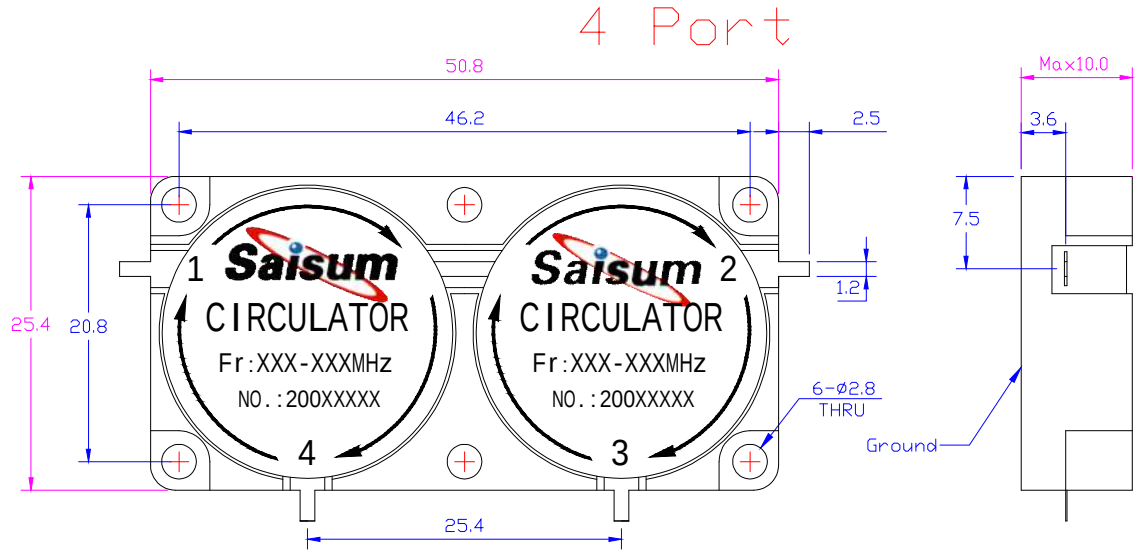

◇Tel: +86-755-88820302 ◇E-mail: sales@saisum.com ◇Web Site: www.saisum.com
◇Fax: +86-755-88820301 ◇Add: F/15,ITC Building,Southlake Road,Luohu District,Shenzhen,China.